Sunbeam

SERVICE MANUAL 1999

HOUSEHOLD PRODUCTS

11/30/2000

Mixmaster Stand Mixer

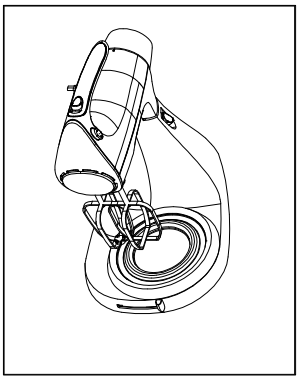

				1999		
		X	PART NO.			
2366		X				
2367			X			
2368				X		
2369					X	
BASIC PARTS	X					

120 V., 275 W., 60 Hz.

KEY #	DESCRIPTION	PART #		1	2	3	4	5
			QUANTITY REQ'D					
1	FRONT COVER	084145-100-805		1	1			
1	FRONT COVER	084145-100-090				1		
1	FRONT COVER	084145-010-088					1	
2	BOOST BUTTON	084152-001-857		1	1			
2	BOOST BUTTON	084152-000-090				1	1	
3	HANDLE COVER	084149-001-857		1	1			
3	HANDLE COVER	084149-000-090				1	1	
4	BOOST SWITCH ASSEMBLY	084150-000-000	1					
5	SCREW	014332-000-000	1					
6	UPPER HOUSING	084148-100-805		1	1			
6	UPPER HOUSING	084148-100-090				1		
6	UPPER HOUSING	084148-109-088					1	
7***	MOTOR Type A	084162-000-000	1					
7***	MOTOR Type E	106356-000-000	1					
7a**	MOUNTS GEAR COVER	019415-000-000	2					
7b**	BEATER GEAR SPINDLE	020578-001-000	2					
7c**	O RING RUBBER	019417-000-000	2					
8	EJECTOR BUTTON	084154-001-857		1	1			
8	EJECTOR BUTTON	084154-000-090				1	1	
9	EJECTOR LEVER	084155-000-805	1					
10	WHIPPER RETAINER	084163-000-805	1					
11	SCREW	018350-005-000	10					
12	LOWER HOUSING	084158-005-805		1	1			
12	LOWER HOUSING	084158-000-090				1		
12	LOWER HOUSING	084158-010-088					1	
13	CONTROL KNOB	084164-100-857		1	1			
13	CONTROL KNOB	084164-100-090				1	1	
14**	SWITCH ADAPTER	100595-000-000	1					
15**	FLAT WASHER	100268-000-000	1					
16**	SPRING WASHER	100269-000-000	1					
17**	RETAINING WASHER	100270-000-000	1					

**** NOT SHOWN ON DRAWING**

*****PLEASE CHECK THE EXPLODED VIEWS TO IDENTIFY.**

*****MOTOR A has plastic bracket and leads position to the side**

*****MOTOR E has metal bracket and leads are aligned with the motor**

Sunbeam

SERVICE MANUAL 1999

HOUSEHOLD PRODUCTS

11/30/2000

Mixmaster Stand Mixer

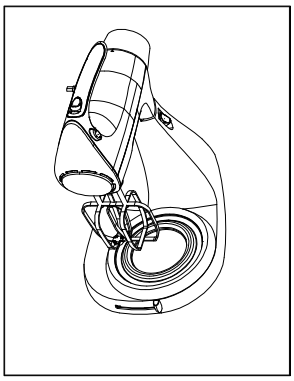

				1999		
				PART NO.		
2366		X				
2367			X			
2368				X		
2369					X	
BASIC PARTS	X					

120 V., 275 W., 60 Hz.

KEY #	DESCRIPTION	PART #	QUANTITY REQ'D					
				1	2	3	4	5
18	HINGE PIN	084159-000-000	1					
19	RETAINER BRACKET	069472-000-000	1					
20***	P.C. BOARD ASSAY. Type A	084218-301-000	1					
20***	P.C. BOARD ASSAY. Type E	106357-000-000	1					
21**	CORD ASSEMBLY	019565-005-818		1	1			
21**	CORD ASSEMBLY	019565-015-090				1	1	
22	STAND	084128-100-805		1	1			
22	STAND	084128-100-090				1		
22	STAND	084128-100-088					1	
23	RELEASE LEVER	084129-001-805		1	1			
23	RELEASE LEVER	084129-000-090				1	1	
24**	TORSION SPRING	084131-000-000	1					
25**	PIVOT PIN	084130-000-000	1					
26	LOCK PIN	084136-000-000	1					
27	SPRING	084137-000-000	1					
28	GUIDE PLATE	084135-000-000	1					
29	LOCK BUTTON	084138-001-857		1	1			
29	LOCK BUTTON	084138-000-090				1	1	
30	TURNTABLE LEVER	084139-000-000	1					
31	RETAINING RING	100523-000-000	1					
32	BASE PLATE	084133-000-000	1					
33	RUBBER FOOT	084134-000-000	4					
34	TURNTABLE KNOB	084140-001-857		1	1			
34	TURNTABLE KNOB	084140-000-090				1	1	
35	TURNTABLE ASSEMBLY	084141-000-805		1	1			
35	TURNTABLE ASSEMBLY	084141-000-090				1	1	
36	DRIVE WHIPPER ASSEMBLY	084121-009-000	1					
37	CENTER WHIPPER	084124-000-000	1					
38**	DOUGH HOOK - INNER	084125-000-000			1	1	1	
39**	DOUGH HOOK - OUTER	084126-000-000			1	1	1	
40**	SMALL BOWL, GLASS	027481-000-000		1				
41**	SMALL BOWL, SS	022803-000-000			1	1	1	
42**	LARGE BOWL, GLASS	027482-000-000		1				
43**	LARGE BOWL, SS	022802-000-000			1	1	1	
**	INSTRUCTIONS BOOK	061638-000-000	1					

**** NOT SHOWN ON DRAWING**

***** PLEASE CHECK EXPLODED VIEW TO IDENTIFY PCB**

*****PCB ASSAY. MUST MATCH CORRESPONDING TYPE MOTOR (A OR E)**

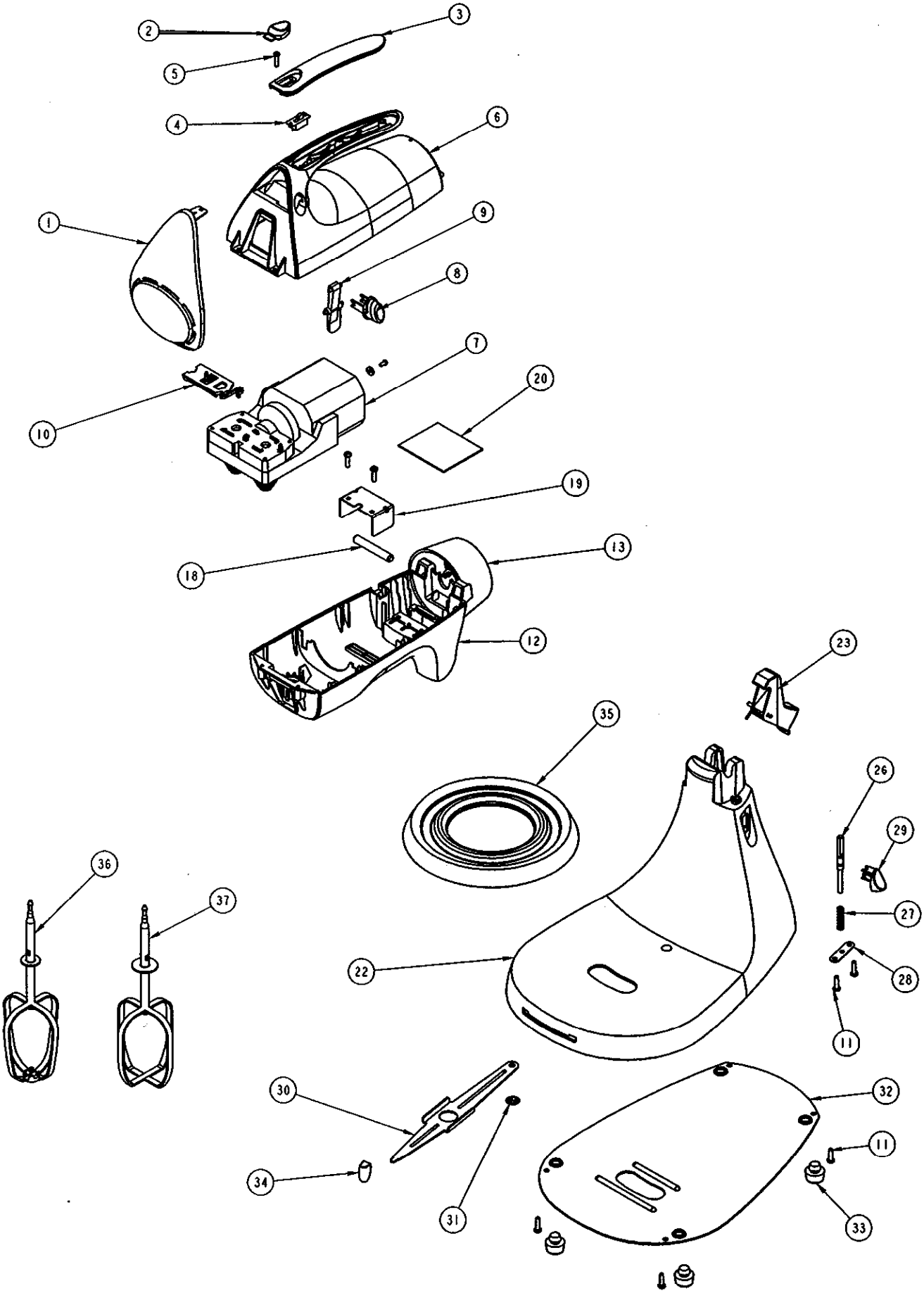
2
3
5
4
6
1
9
8
7
20
10
19
18
13
12
23
35
26
29
36
37
27
22
28
11
30
32
11
34
31
33

MOTOR TYPE E

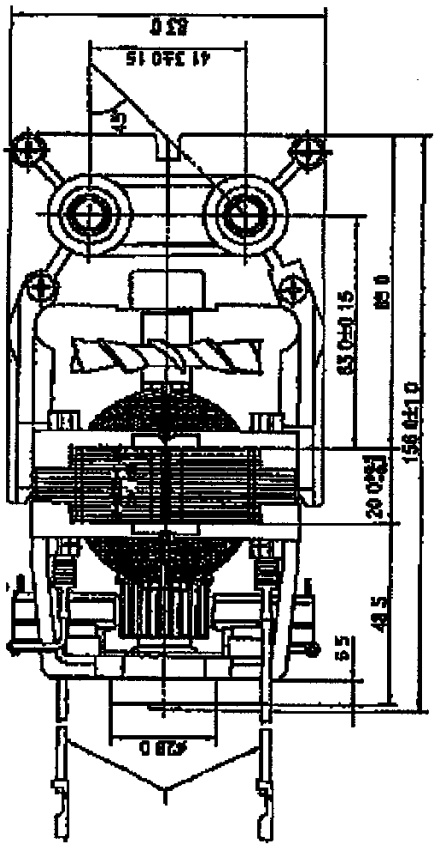

PCB ASSAY TYPE E

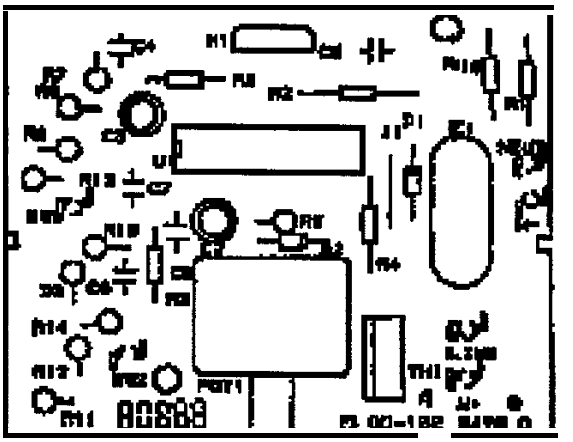

MOTOR TYPE A

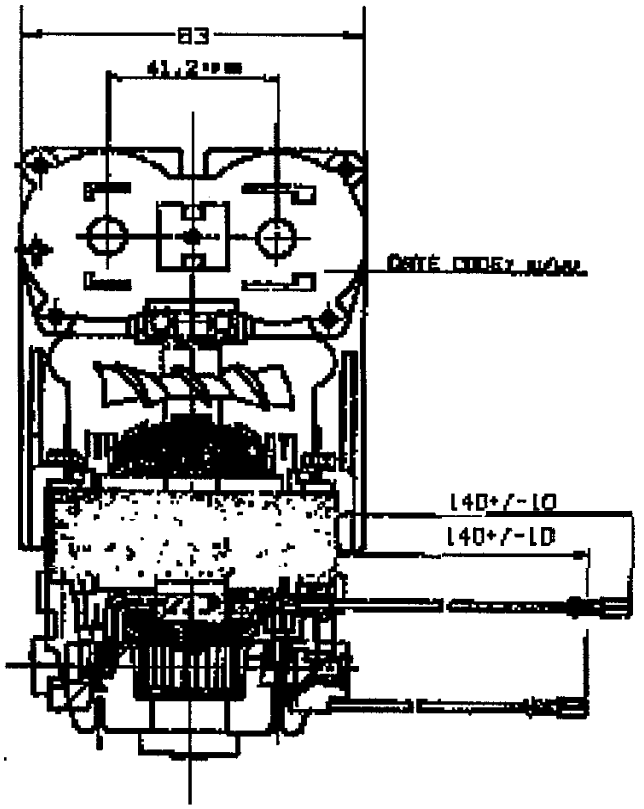
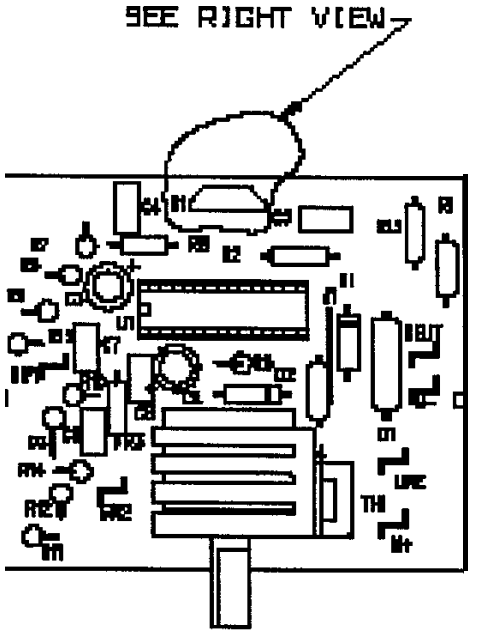
PCB ASSAY TYPE A