SERVICE MANUAL 1999

HOUSEHOLD PRODUCTS

11/30/2000

TOASTLOGIC TOASTERS

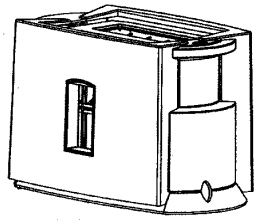

				1999		
		X	PART NO.			
3804-000		X				
3805-000			X			
3809-000				X		
BASIC PARTS	X					

120 V., 900 W., 50/60 Hz.

KEY #	DESCRIPTION	STATUS	PART #		1	2	3	4	5
1	PCB L2 COOL 120 VOLT-OSTER		052384-001-000		1	1			
1	PCB L1 COOL 120 VOLT-SUNBEAM		052384-002-000				1		
2**	COOL TOUCH TOASTER CORD-USA	OB	002696-620-818	1					
3	120 V CHASIS ASM W/WINDOW		050778-900-000			1			
3	120 V CHSSIS ASM W/WINDOW		050778-901-000		1				
4	CRUMBTRAY HANDLE		082310-000-805	1					
5	METAL CRUMBTRAY		082305-000-000	1					
6	LIFTER		082313-000-805	1					
7	SHELL RIGHT End L1 (PRINTED)		082312-000-805				1		
7	SHELL RIGHT END L2 (PRINTED)		052345-000-000		1	1			
8	SHELL LEFT END		082311-000-805	1					
9	CANCEL BUTTON		082315-000-826	1					
10	WINDOW FRAME		082802-000-805			1	1		
11	SHELL WINDOW		102989-000-000			1			
11	SHELL WINDOW		102990-000-000		1				
11	SHELL CENTER		102990-001-000				1		
12	KNOB, COLOR CONTROL		082245-000-826	1					
13	ARM,COLOR CONTROL		082314-000-805	1					
14	BASE (PRINTED)		052342-000-000	1					
15	KNOB, FOOD SELECT		082800-000-826		1	1			
16**	SPRING, CANCEL COMPRESSION		082843-000-000	1					
17*	STAND OFF		082355-000-090		2	1	1		
**	INSTRUCTION BOOK		101750-000-000	1					

**** NOT SHOWN ON DRAWING**

OB - OBSOLETE ITEM

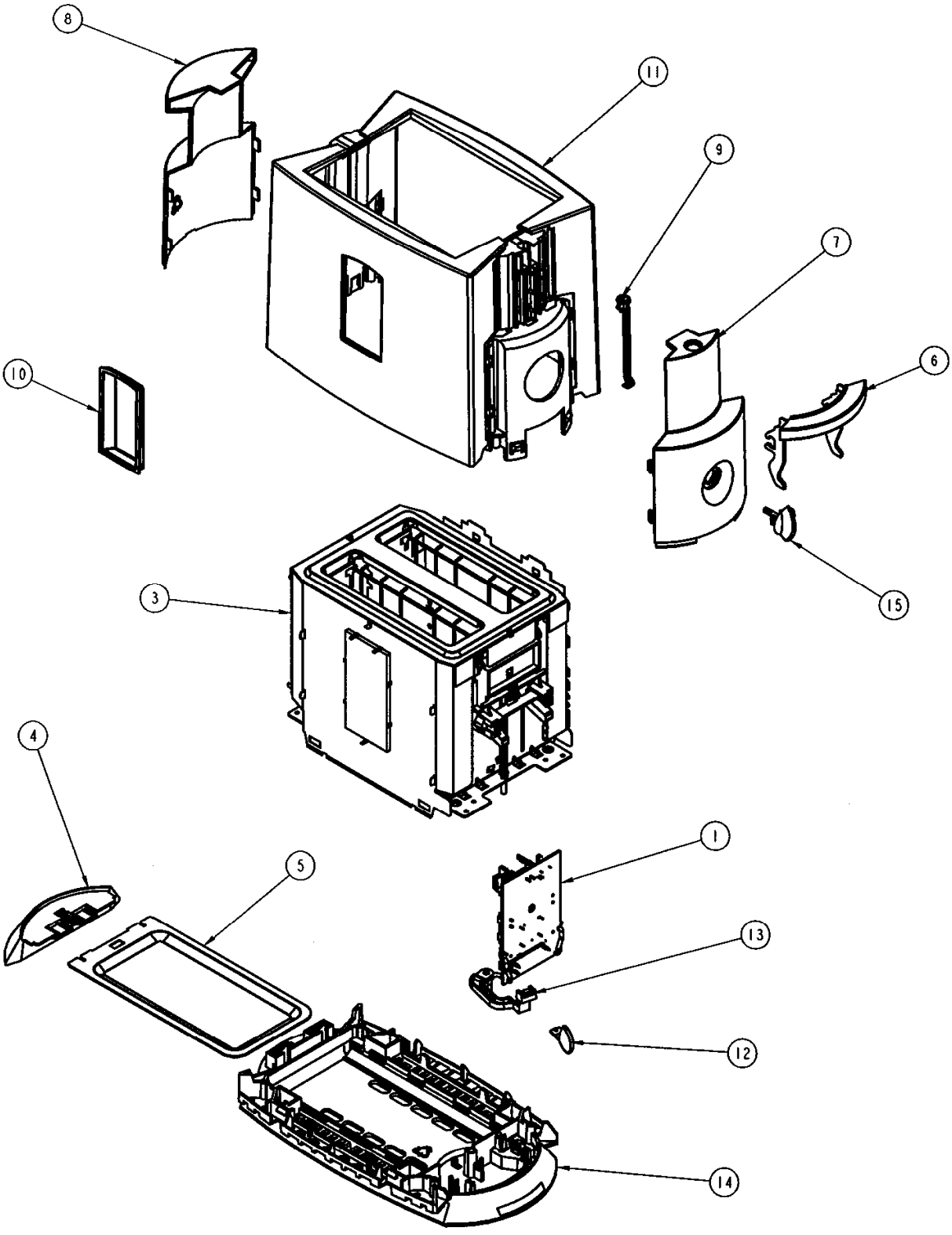
8
11
9
7
6
10
15
3
4
5
1
13
12
14