Sunbeam
Oster

# SERVICE MANUAL 2000

## HOUSEHOLD PRODUCTS

11/30/2000

## VEGETABLE STEAMER

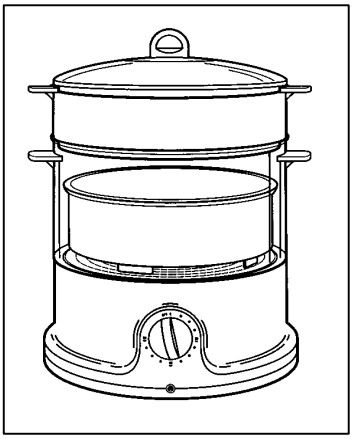

**4714**

| | | | | 2000 | | |
|---|---|---|---|---|---|---|
| | | X | PART NO. | | | |
| 4714 | | | | | | |
| | | | | | | |
| | | | | | | |
| | | | | | | |
| | | | | | | |
| BASIC PARTS | X | | | | | |

**120 V., 900 W., 60Hz.**

| KEY # | DESCRIPTION | PART # | QUANTITY REQ'D | 1 | 2 | 3 | 4 | 5 |
|---|---|---|---|---|---|---|---|---|
| 1 | LID, STEAMER | 82914-017-000 | 1 | | | | | |
| 2 | STACKING STEAM BOWL | 82914-018-000 | 1 | | | | | |
| 3 | SEPARATOR RING | 82914-019-000 | 1 | | | | | |
| 4 | RICE BOWL | 82914-020-000 | 1 | | | | | |
| 5 | STEAMER BOWL | 82914-021-000 | 1 | | | | | |
| 6 | DRIP TRAY | 82914-022-000 | 1 | | | | | |
| ** | STRAINER / FILTER | 82914-025-000 | 1 | | | | | |
| ** | INST. BOOK | 67531-002-000 | 1 | | | | | |

**** NOT SHOWN ON DRAWING**

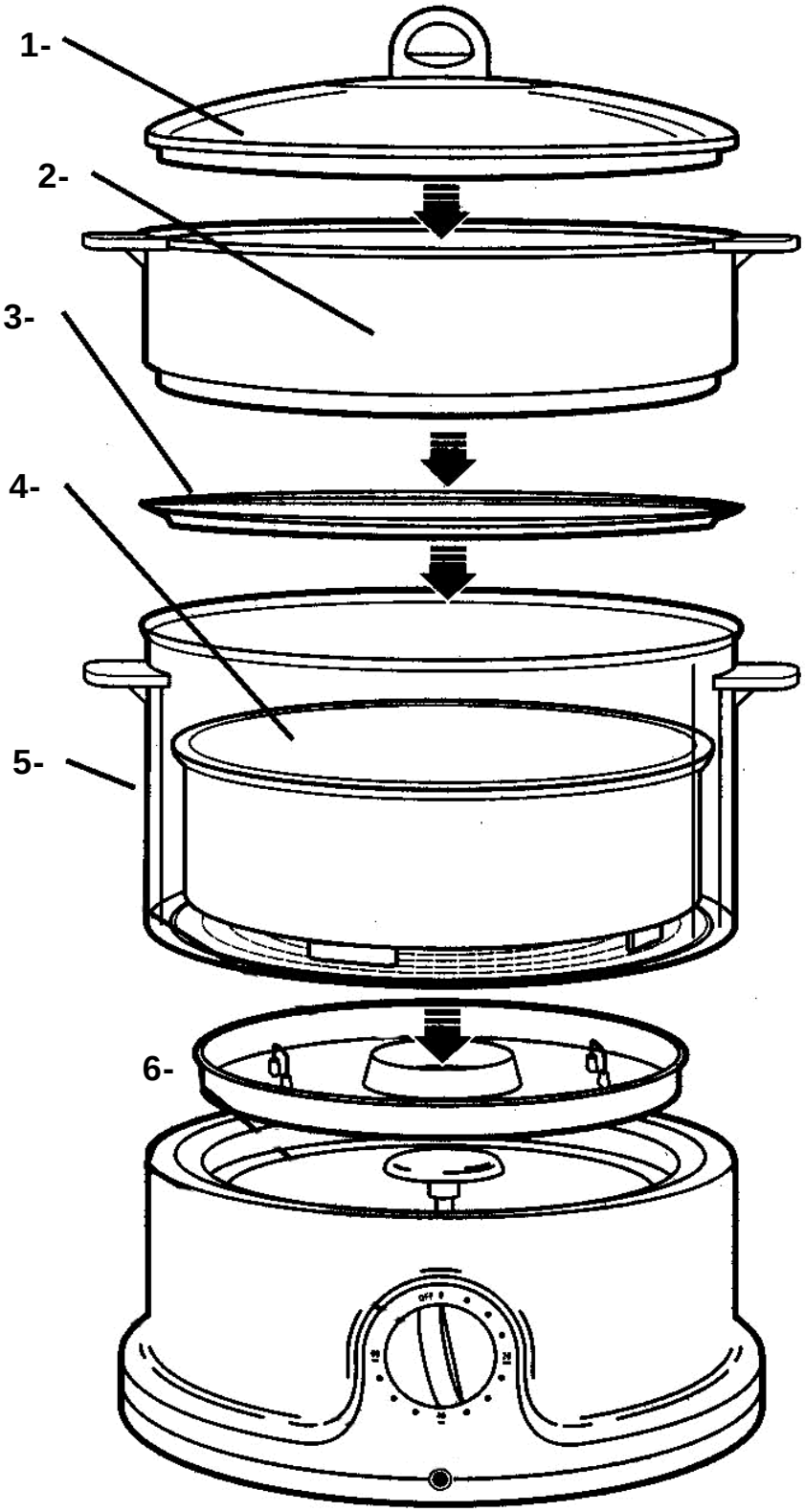
1-
2-
3-
4-
5-
6-
OFF